Aruba Certified Switching Professional
OFFICIAL CERTIFICATION STUDY GUIDE (EXAM HPE6-A45)

First Edition

Miriam Allred

HPE Press
660 4th Street, #802
San Francisco, CA 94107

Aruba Certified Switching Professional
Official Certification Study Guide (Exam HPE6-A45)
Miriam Allred

© 2018 Hewlett Packard Enterprise Development LP.

Published by:

Hewlett Packard Enterprise Press
660 4th Street, #802
San Francisco, CA 94107

All rights reserved. No part of this book may be reproduced or transmitted in any form or by any means, electronic or mechanical, including photocopying, recording, or by any information storage and retrieval system, without written permission from the publisher, except for the inclusion of brief quotations in a review.

ISBN: **978-1-942741-81-7**

WARNING AND DISCLAIMER
This book provides information about the topics covered in the Implementing Aruba Campus Switching Solutions (HPE6-A45) certification exam. Every effort has been made to make this book as complete and as accurate as possible, but no warranty or fitness is implied.

The information is provided on an "as is" basis. The author, and Hewlett Packard Enterprise Press, shall have neither liability nor responsibility to any person or entity with respect to any loss or damages arising from the information contained in this book or from the use of the discs or programs that may accompany it.

The opinions expressed in this book belong to the author and are not necessarily those of Hewlett Packard Enterprise Press.

Note: Books and courses developed prior to the Hewlett-Packard Company separation contain branding, logos, web page links, and other elements/information that has not been updated for each HP Inc. and Hewlett Packard Enterprise. The general knowledge and skills are still considered of value to HP Inc. and Hewlett Packard Enterprise employees (partners/customers) respectively, so these legacy materials are being made available here. Plans are in place for updating the most highly-used content for each HP Inc. and Hewlett Packard Enterprise.

TRADEMARK ACKNOWLEDGEMENTS
All third-party trademarks contained herein are the property of their respective owner(s).

GOVERNMENT AND EDUCATION SALES
This publisher offers discounts on this book when ordered in quantity for bulk purchases, which may include electronic versions. For more information, please contact U.S. Government and Education Sales 1-855-447-2665 or email sales@hpepressbooks.com.

Feedback Information

At HPE Press, our goal is to create in-depth reference books of the best quality and value. Each book is crafted with care and precision, undergoing rigorous development that involves the expertise of members from the professional technical community.

Readers' feedback is a continuation of the process. If you have any comments regarding how we could improve the quality of this book, or otherwise alter it to better suit your needs, you can contact us through email at hpepress@epac.com. Please make sure to include the book title and ISBN in your message.

We appreciate your feedback.

Publisher: Hewlett Packard Enterprise Press

HPE Contributors: Don McCracken, Gerhard Roets, Wim Groeneveld and Craig Maxwell

HPE Press Program Manager: Michael Bishop

About the Author

Miriam Allred has spent the last 12 years configuring, testing, and troubleshooting HP and HPE Aruba wired and wireless networks. Miriam combines this wide range of technical expertise with pedagogy and instructional design training, allowing her to create technical training courses for both advanced and entry-level networking professionals. Miriam Allred has a Masters degree from Cleveland State University and a Bachelors degree from Brigham Young University.

Introduction

This study guide is based on the Aruba course titled *Implementing Aruba Campus Switching Solutions.* It is designed to help you study for the Implementing Aruba Campus Switching Solutions certification exam (HPE6-A45) and delta exam (HPE6-A46) to achieve the Aruba Certified Switching Professional (ACSP) certification. The ACSP certification validates that you have the networking skills and expertise to design, implement and manage the modern network, based on Aruba wired and wireless solutions for campus networks.

Beyond certification, this guide will serve as a useful on-the-job reference for designing and configuring Aruba networking solutions. Learn how to implement layer 2 technologies and layer 3 routing protocols to ensure a loop-free topology and resilient network. Study the essential mechanisms for securing the network such as access control lists (ACLs), 802.1X with Aruba ClearPass, MAC authentication, and SNMPv3 as well as methods for controlling wireless access for guest users on campus. You will also learn how to configure Quality of Service (QoS) on AOS-Switches and understand how to implement features such as backplane stacking, Virtual Switching Framework (VSF), tunneled-node, and more.

Certification and Learning

Hewlett Packard Enterprise Partner Ready Certification and Learning provides end-to-end continuous learning programs and professional certifications that can help you open doors and succeed in the idea economy. We provide continuous learning activities and job-role based learning plans to help you keep pace with the demands of the dynamic, fast paced IT industry; professional sales and technical training and certifications to give you the critical skills needed to design, manage and implement the most sought-after IT disciplines; and training to help you navigate and seize opportunities within the top IT transformation areas that enable business advantage today.

As a Partner Ready Certification and Learning certified member, your skills, knowledge, and real-world experience are recognized and valued in the marketplace. To continue your professional and career growth, you have access to our large HPE community of world-class IT professionals, trend-makers and decision-makers. Share ideas, best practices, business insights, and challenges as you gain professional connections globally.

To learn more about HPE Partner Ready Certification and Learning certifications and continuous learning programs, please visit http://certification-learning.hpe.com

Audience

This book is designed for networking IT professionals involved in implementing Aruba networking solutions. Implementation tasks include interpreting network architectures and customer requirements to install, configure, and manage Aruba networking solutions.

Assumed Knowledge

Typical candidates for this certification are networking IT professionals who have advanced-level implementation experience with Aruba wired switching solutions. It is assumed you have a minimum of 4 to 5 years of general networking experience and 2 years of experience focused on interpreting network architectures and customer requirements to install and configure Aruba solutions.

Minimum Qualifications

The pre-requisite qualification for the Aruba ACSP certification is the Aruba Certified Switching Associate (ACSA) V1.

Relevant Certifications

After you pass these exams, your achievement may be applicable toward more than one certification. To determine which certifications can be credited with this achievement, log in to The Learning Center and view the certifications listed on the exam's More Details tab. You might be on your way to achieving additional certifications.

Preparing for Exam HPE6-A45

This self-study guide does not guarantee that you will have all the knowledge you need to pass the exam. It is expected that you will also draw on real-world experience and would benefit from completing the hands-on lab activities provided in the instructor-led training.

Recommended HPE Training

Recommended training to prepare for each exam is accessible from the exam's page in The Learning Center. See the exam attachment, "Supporting courses," to view and register for the courses.

Obtain Hands-on Experience

You are not required to take the recommended, supported courses, and completion of training does not guarantee that you will pass the exams. Hewlett Packard Enterprise strongly recommends a combination of training, thorough review of courseware and additional study references, and sufficient on-the-job experience prior to taking an exam.

Exam Registration

To register for an exam, go to http://certification-learning.hpe.com/tr/certification/learn_more_about_exams.html

CONTENTS

1 **Introduction to Aruba Solutions** 1
Assumed knowledge 1
Introduction 1
Digital workplace 1
Digital workplaces require a Mobile First Network 2
Aruba Switch solutions 3
Aruba 5400R zl2 Switch Series 4
Aruba 3810 Switch Series 5
Aruba 2930F Switch Series 5
Unified wired and wireless management 5
Unified, policy-based access management: Aruba ClearPass 6
Campus architectures 7
Review basic networking concepts 8
Summary 9
Learning check 9
Answers 10
Review: Basic technologies for a campus network 10
Learning check 11

2 **Data Link Layer Redundancy Technologies** 13
Assumed knowledge 13
Introduction 13
Rapid Per-VLAN Spanning Tree Plus (RPVST+) 14
Why RPVST+ 14
Comparison: RPVST+, RSTP, and MSTP 15
Rapid Spanning Tree Protocol Plus BPDUs 16
Path cost differences 18
RPVST+ setup 19
MSTP versus RPVST+ 19
Vulnerability: Rogue device becomes root bridge 20
BPDU protection 21
PVST protection 23
BPDU protection versus BPDU filtering 23
Root guard 24
BPDU throttling 25
STP loop guard 26

Loop protection 28
Vulnerability: Edge loops in a network without spanning tree 28
Vulnerability: Loops undetectable by spanning tree 29
Loop protection overview 30
Unidirectional Link Detection (UDLD) 33
UDLD frames 35
Guidelines for configuring UDLD 36
Tagged or untagged UDLD frames 37
View information about UDLD-enabled ports 38
Summary 38
Learning check 39
Answers 40
MSTP versus RPVST+ 40
Learning check 41

3 Virtual Router Redundancy Protocol (VRRP) 45
Assumed knowledge 45
VRRP use case 45
VRRP overview 47
Controlling VRRP states 48
Controlling the states with a VRRP owner (legacy) 48
Controlling the roles without a VRRP owner 49
Configure VRRP 49
VRRP basic operation 51
Choosing the virtual router settings 52
VRRP failover 52
Supplemental information on controlling the failover time 54
Supplemental information on electing the new master 54
Ping response behavior 55
VRRP preemptive and nonpreemptive modes 56
Considerations for setting up VRRP 57
Load sharing routing within a subnet 58
Load sharing routing across different subnets 59
Combining VRRP and MSTP 59
Configure MSTP 61
Configure VRRP 61
Summary 62
Learning check 62
Answers 66
Considerations for setting up VRRP 66
Learning check 66

4 Aruba Backplane Stacking and Virtual Switching Framework (VSF) 71
Assumed knowledge 71
Introduction 72
Backplane stacking 72
Backplane stacking topologies 73
Roles in the backplane stack 74
Configuring a backplane stack 76
Election of the commander and standby member 78
Stack operations 79
Stack fragments 80
Virtual Switching Framework (VSF) 81
Plug-and-play VSF configuration 82
VSF provisioning use cases 84
Manual VSF configuration 86
Viewing the VSF fabric 88
Implementing VSF on Aruba 2930F Series switches 88
Configuring VSF on Aruba 2930F Series switches 91
Compare unicasts on backplane stacking and VSF forwarding 92
Compare flooding on backplane stacking and VSF forwarding 93
Protection against split brain with MAD 94
OOBM MAD 94
LLDP MAD setup 95
LLDP MAD behavior 96
VLAN MAD 97
VSF Fast Software Updates (FSU) 99
Summary 99
Learning check 100
Answers 101
Virtual Switching Framework (VSF) 101
Learning check 102

5 Advanced Open Shortest Path First (OSPF) 105
Assumed knowledge 105
Introduction 105
OSPF overview 106
Basic OSPF setup 106
Background information on OSPF 107
Configure OSPF for a one area topology 116
Review basic OSPF concepts 125

OSPF multi-area overview 126
ABRs 128
Need for route aggregation between areas 130
Aggregating summaries 131
Filtering inter-area routes 133
Review multi-area OSPF concepts 134
OSPF external routes 136
Need for redistributing external routes into OSPF 137
External routes and ASBRs 138
Summary ASBR advertisements 140
Need for eliminating excessive external routes 143
Using stub areas to eliminate external routes 144
Need for eliminating all inter-area and external routes 146
Using totally stub areas 147
Need for advertising local external routes in a stub area 148
Using NSSAs 148
Review external route advertisement 149
Best route selection in redundant OSPF network 151
Setting interface cost 151
Best practices for networks with redundant ABRs 152
Choosing best inter-area routes 154
Options for external route metrics 156
Choosing between external routes to the same network: Type 2 metric 156
Learning check 158
Choosing between external routes to the same network: Type 1 metric 160
Learning check 161
Review factors that affect OSPF route selection 163
OSPF failover and convergence 165
Detecting failed neighbor relationships 166
Using BFD to speed OSPF failed neighbor detection 168
BFD control messages and asynchronous mode 170
BFD echo mode 171
The need for graceful restart 172
OSPF graceful restart process 174
Implementing OSPF graceful restart 176
Implementing OSPF and VRRP 177
Virtual links 179
Example situations that require virtual links 179

Virtual link 179
Virtual link configuration process 180
OSPF authentication 181
Simple authentication configuration 183
MD5 authentication configuration 184
Summary 184
Learning check 185
Answers 185
Review basic OSPF concepts 185
Review multi-area OSPF concepts 188
Review external route advertisement 190
Learning check for "Choosing between external routes to the same network: Type 2 metric" 191
Learning check for "Choosing between external routes to the same network: Type 1 metric" 192
Learning check 193

6 Internet Group Management Protocol (IGMP) 195
Assumed knowledge 195
Introduction 195
Multicast overview 196
Multicast uses 198
Multicast flooding within VLANs 198
IGMP use cases 200
IGMP queriers 202
Enabling IGMP 202
Multiple IGMP queriers and elections 203
Behavior without PIM enabled 204
Behavior with PIM enabled 204
Building membership tables with IGMP reports 205
Supplemental information on how AOS-Switches handle reports 206
Filtering traffic based on membership tables 207
IGMP snooping 207
Configuring IGMP snooping 209
How AOS-Switches handle unknown multicasts 209
Data-driven mode and fast leave 210
Nondata-driven mode (legacy) 211
Summary 211
Learning check 212
Answers 213
Learning check 213

7 Protocol Independent Multicast (PIM) 215
Assumed knowledge 215
Introduction 215
Multicast routing use cases 216
Multicast routes 216
Discovering multicast routes 217
PIM-DM versus PIM-SM 219
PIM-DM 220
PIM-DM operation: flooding and pruning 221
PIM-DM operation: grafts 222
Interpreting PIM-DIM (*, G) entries 223
Interpreting PIM-DM (S, G) entries 224
Using state refreshes to minimize flooding 227
Understanding the relationship between the PIM-DM tree and the unicast routing table 229
Understanding how a multicast forwarder is elected 231
PIM-SM 232
RPT 233
Behavior as source begins forwarding 234
Switching to SPT 235
Specifying the RP 237
Bootstrap mechanism 238
Selecting an RP from the RP set 240
Summary 243
Learning check 244
Answers 247
Learning check 247

8 Border Gateway Protocol (BGP) 251
Assumed knowledge 251
Introduction 251
BGP use case: Multihomed ISP connections 252
Other BGP use cases 253
BGP AS 253
BGP TCP sessions 255
BGP neighbor addresses 255
eBGP neighbors 256
iBGP neighbors 257
MD5 authentication 257
Enable BGP 258

BGP connection states....258
View information about the BGP session....260
Receiving routes from BGP neighbors....260
First criteria in best BGP route selection....261
More criteria in BGP best route selection....263
Advertising routes in BGP....265
Inject routes into the BGP routing table....266
Advertise external routes in OSPF....267
Avoid becoming a transit AS....268
Review activity....269
Summary....269
Learning check....270
Answers....273
Review activity....273
Learning check....273

9 Access Control Lists....277
Assumed knowledge....277
Introduction....277
What is an ACL?....278
Reasons to implement ACLs....278
ACL IDs and types....279
ACL types....279
ACL IDs....280
ACL rule components....281
Sequence ID....281
Action....281
Matching criteria....282
Example IP ACL rules....282
IPv4 standard ACLs....282
IPv4 extended ACLs....283
Example MAC ACL rules....287
Standard MAC ACLs....287
Extended MAC ACLs....288
Determine use cases for ACL types....289
Processing order and implicit deny....290
Implicit action....290
Applying ACLs to interfaces....291
Tips....293

Example ACL 294
Activity: Plan ACLs 294
Scenario 1: Protect the mobility infrastructure 295
Scenario 2: Control access for less trusted users 295
Configuring the ACL for Scenario 1 296
Configuring the ACL for Scenario 2 297
Detailed look at source and destination IP addresses in ACLs 300
Specifying IP address ranges with prefix length 300
Subnet masks 301
Prefix lengths 301
Rules of thumb for specifying ranges with prefix lengths 301
Using and interpreting wildcard bits 302
Wildcard bits 302
Examples 303
Add a rule using the correct wildcard bits 305
Specifying MAC addresses ranges 306
Managing ACL rule sequence 306
Automatic numbering 307
Manual numbering 307
Sequence renumbering 307
Logging ACL matches 308
Activity: Analyzing an ACL 309
Inbound RACLs 310
Outbound RACLs 311
Supplemental information: Inbound and outbound RACLs on multinetted VLANs 312
Inbound VACLs 312
Outbound VACLs 314
VACLs at the edge 315
Port-based ACLs (PACLs) 318
ACL grouping 319
Activity: Predict filtering behavior 321
Summary 322
Learning check 323
Answers 324
Determine use cases for ACL types 324
Activity: Plan ACLs 325
Activity: Analyzing an ACL 327
Activity: Predict filtering behavior 328
Learning check 328

10 802.1X Authentication....331
Assumed knowledge....331
Introduction....331
Port-based authentication use models....331
802.1X overview....332
802.1X logical ports....332
802.1X roles....333
802.1X requirements....335
EAP framework....336
EAP and RADIUS together....337
EAP methods....338
EAP-Transport Layer Security....339
PEAP and EAP-Tunneled TLS....341
Choosing an EAP method....343
802.1X configuration....344
Specifying the RADIUS server....344
Managing multiple RADIUS servers and RADIUS groups....345
Ensuring compatibility with ClearPass....348
Viewing the RADIUS settings on AOS-Switches....349
Enabling 802.1X....350
Customizing authenticated users' access....352
How the RADIUS server sends dynamic settings....353
How dynamic port ACLs are applied....357
Applying dynamic settings with Aruba ClearPass....358
Viewing dynamic settings....359
Port-based mode....361
Additional examples of how port-based mode operates....361
User-based mode....362
Additional examples of how user-based mode operates....363
User role-based authorization....366
Summary....368
Learning check....368
Answers....369
Learning check....369

11 MAC Authentication....373
Assumed knowledge....373
Introduction....373
MAC-Auth use cases....373
RADIUS-based MAC-Auth....374
RADIUS-based MAC-Auth options....375

MAC-Auth and provisioning with ClearPass 377
RADIUS-based MAC-Auth configuration process 378
Local MAC-Auth 379
MAC groups 380
Profiles 382
LMA Unauthorized-client VLAN 384
Implementing MAC-Auth on ports connected to multiple clients 385
Combining MAC-Auth and 802.1X 386
Combining MAC-Auth and 802.1X in multiple client scenarios 388
Using Authorized-client VLANs 389
Summary 389
Learning check 390
Answers 390
Learning check 390

12 Captive Portal and Other Guest Options 393
Assumed knowledge 393
Introduction 393
Guest access 394
Web-based authentication 394
Advantages of Web-Auth 394
Disadvantages of Web-Auth 395
Types of Web-based authentication 395
Additional capabilities of a solution such as Aruba ClearPass 395
AOS-Switches' support for Web-based authentication 396
Captive portal authentication 397
Authentication enforced on the AOS-Switch 398
High-level authentication process 399
More detailed look at the redirection to the captive portal 400
More detailed look at the login process 402
Optional VLAN for unregistered devices 405
Configuring an AOS-Switch to integrate with the Aruba ClearPass captive portal 406
Web-Auth and EWA 409
Local Web-Auth to a RADIUS server 410
Basic Web-Auth setup 411
EWA 413
Limited access with no authentication 415
802.1X Unauthorized-client VLAN 415
Guidelines for using the 802.1X Unauthorized-client VLAN 416

Supporting multiple employees and guests with the Unauthorized-client VLAN 417
Summary 418
Learning check 419
Answers 420
Learning check 420

13 Integrating with an Aruba Mobility Solution 423
Assumed knowledge 423
Introduction 423
Use cases 423
Tunneling traffic to an MC 425
Using PAPI enhanced security 426
Modes 427
Port-based tunneled-node 429
Enabling tunneled-node on ports 429
How the MC handles tunneled-node traffic 430
Role-based tunneled node 432
User role-based authorization 432
Roles for role-based tunnel-node 432
How the MC handles role-based tunneled-node traffic 435
High availability 435
Supporting high availability with VRRP 436
Supporting high availability with clustering 437
Supporting high availability with a backup controller 438
Controlling failure behavior 440
Implementation restrictions 441
Guidelines for the path between tunneled-node switch and MCs 444
MC licensing and capacity considerations 445
Summary 446
Learning check 446
Answers 448
Learning check 448

14 Secure Device Management 451
Assumed knowledge 451
Introduction 451
Management user authentication options 451
Access types 452
Access level 452
Review of default authentication methods 453

RADIUS servers for authenticating management users....454
RADIUS authorization of operator or manager access....455
RADIUS-based command authorization....457
VSAs for defining command authorization....458
Secondary authentication method....460
SNMP....461
SNMP review....462
SNMP objects, OIDs, and MIBs....463
SNMPv3 benefits....463
SNMPv3 users....464
SNMPv3 groups....465
SNMPv3 predefined groups and associated rights....466
SNMPv1/2c versus SNMPv3 operation....467
Ensure SNMPv3 settings match on AOS-Switches and AirWave....469
SNMPv3 notifications....475
Defining traps....476
SNMPv3 notification targets....479
Configuration auditing....482
Monitoring network traffic and events....483
RMON—collect information on a port....484
RMON—generate alarms....486
Other monitoring features....488
sFlow....488
Local traffic mirroring....491
Remote traffic mirroring....493
Summary....495
Learning check....496
Answers....497
RADIUS servers for authenticating management users....497
SNMP review....497
Learning check....499

15 Quality of Service....503
Assumed knowledge....503
Introduction....503
Dealing with congestion....504
TCP and UDP response to congestion....505
Impact of congestion on real-time traffic....505
The challenges in providing QoS....507
QoS use case....508

Queuing and scheduling....508
SP scheduling....509
GMB....510
Viewing how traffic is forwarded in egress queues....513
Controlling the number of queues....514
Introduction to QoS marks....515
Layer 2: 802.1p....516
Layer 3 protocols....516
Methods for prioritizing and queuing traffic....518
Honoring QoS marks....518
Classifying traffic....518
Mix of strategies....519
Honoring QoS marks....519
Honoring 802.1p....519
Honoring DSCP....522
Controlling trusted value at a port level....525
Classifying traffic for QoS....528
Classifying at Layer 2 versus Layer 3....528
Classifying based on interface....529
Classifying with global QoS policies....531
Interaction of QoS classifications and incoming values....532
Classifying traffic with classifier-based QoS policies....533
Summary of how traffic is marked and prioritized....540
Rate limiting....544
Port-based rate limiting....545
Rate limit all traffic....546
Rate limit ICMP traffic....546
Rate limit broadcast and multicast traffic....547
Combining rate limits....547
Egress per-queue rate limiting....548
Class-based rate limiting....549
User-based rate limits....553
LLDP-MED....554
Review interoperation with authentication....554
Enabling LLDP-MED....555
Configuring information advertised in the LLDP-MED TLVs....556
Summary....558
Learning check....558
Answers....561
Review....561
Learning check....562

16 Additional Security Features 565
Assumed knowledge.....565
Introduction 566
DHCP attacks.....566
Using DHCP snooping to protect against DHCP attacks 567
How DHCP snooping works.....568
Configuration 569
Authorized servers.....570
Inserting option 82 with DHCP snooping.....571
Filtering option 82 from connected devices 573
ARP snooping and poisoning.....574
ARP protection.....575
Additional checks 577
DHCP snooping and ARP protection.....577
Guidelines for using dynamic ARP protection 579
The dangers of eavesdropping and unauthorized access.....580
Port security.....581
Port security learn modes.....582
The address limit parameter.....583
Port security actions 583
Use case 1: Limit devices on an edge port.....583
Use case 2: Preventing changes to the devices connected to ports 585
Use case 3: Exactly controlling devices that can connect to a port 587
Use case 4: Combining port security with 802.1X port-based authentication.....588
Eavesdropping protection 590
MAC lockdown.....591
Considering redundant links 593
MAC lockdown versus port security.....593
Connection rate filtering 594
Operation 594
Action.....595
Unblocking a blocked host.....596
Sensitivity.....597
Implementation recommendations 598
Excluding hosts from filtering 599
Summary.....600
Learning check.....601
Answers 601
Learning check 601

17 Practice Exam 603
Introduction 603
Minimum qualifications.....603
HPE6-A45 exam details.....603
HPE6-A45 testing objectives.....604
Test preparation questions and answers 605
Questions.....605
Answers.....632

Index.....643

1 Introduction to Aruba Solutions

EXAM OBJECTIVES

- ✓ Describe market trends that are leading companies to implement a digital workplace
- ✓ Describe how the Mobile First Network from Aruba, a Hewlett Packard Enterprise company, delivers the digital workplace

Assumed knowledge

Before reading this chapter, you should have a basic understanding of:

- IP addressing
- Open Systems Interconnection (OSI) model
- Wired networking protocols and technologies such as Spanning Tree Protocol (STP), link aggregation, Virtual LANs (VLANs), switching, and routing
- Aruba Virtual Switching Framework (VSF)

Introduction

You will begin this chapter by examining the trends that are driving companies to move to a digital workplace and how Aruba's Mobile First Network delivers the digital workplace. You will also briefly explore the solutions that are highlighted in this study guide.

Finally, you will review several technologies that you should understand before moving on to other chapters.

Digital workplace

HPE helps companies enable workplace productivity by helping them create a digital workplace.

As you know only too well, the nature of work is changing. The new generation of collaborative digital workplaces, an increase in Internet of Things (IoT) devices, and the increased speed of doing business on mobile are just part of this change that leads IT to ask the question—Is the network infrastructure ready?

In addition to the nature of work, the workforce itself is changing. According to *Time* magazine, millennials will make up three-fourths of the global workforce by 2025. ("Millennials vs. Baby Boomers: Who Would You Rather Hire?" Time.com, Mar. 2012.) These GenMobile workers are tech savvy and like to do their work using a variety of devices. They thrive when they can collaborate with new tools in an open environment. To be productive and experience job satisfaction, these new workers need a network that provides access for any device, anywhere they want to work.

Employers that want to attract and retain the best of this new workforce must pay attention to employees' need to work where and how they want. A study by Cornell University reports 33% less attrition rate within companies that allow their workforce to work wherever they roam.

Creating and delivering new business models, solutions, and experiences require harnessing new types of applications, data, and risks. It also requires implementing new ways to build, operate, and consume technology.

Digital workplaces require a Mobile First Network

The Aruba Mobile First Network helps adapt to the challenges that attend mobile and Internet of Things (IoT), Bring Your Own Device (BYOD), and Unified Communications (UC). At the heart of the Mobile First network is the Aruba Mobile First platform, the intelligent software layer between the Aruba technology ecosystem and the Aruba Mobile First infrastructure (see Figure 1-1).

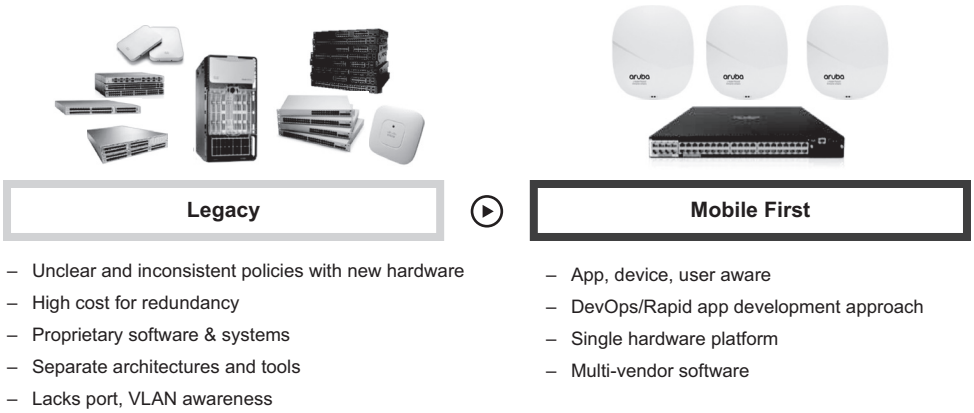

Figure 1-1 Digital workplaces require a Mobile First Network

The infrastructure must become application aware to adapt and respond in real time to meet these requirements.

The Mobile First platform makes the underlying Aruba Mobile First infrastructure smarter, enabling it to adapt to idea-economy innovations in real time. And because all products within the Mobile First infrastructure share a single architecture, you can deploy a single set of hardware components across the entire company and manage them all from anywhere with the Mobile First platform.

Designed to enrich the mobile experience and secure IoT for operational technologies, the Mobile First platform acts as a rich source of insights for business and IT. The platform's focus on mobile and IoT clearly differentiates Aruba and helps companies accelerate innovation within the Aruba technology ecosystem, which speaks to Aruba's commitment to open standards.

Consisting of third-party IT services as well as business and end-user facing applications, the Aruba technology ecosystem allows developers to freely innovate and customize networking functions dynamically in real time by using the rich contextual data that mobile and IoT devices collect.

Aruba Switch solutions

Although Aruba is known for its industry-leading wireless solutions with technologies such as ClientMatch, AppRF, and 802.11ac Wave 2, as an HPE company, it has also gained strength as a wired solution provider. The sample architecture shown in Figure 1-2 illustrates the power of a unified wired and wireless architecture. The wired network consists of Aruba 3810 or 5400R switches at the core and Aruba 3810 or 2930F switches at the access layer. Aruba AP 330s, controlled by centralized Aruba Mobility Controller 7240s, provide wireless services, while Aruba AirWave delivers on-premises network management and Aruba ClearPass Policy Manager, user and access management.

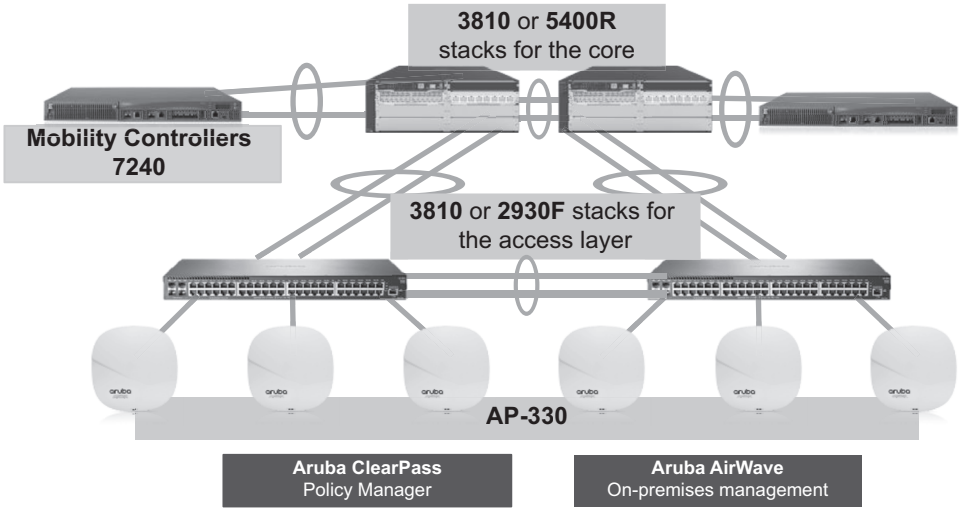

Figure 1-2 Aruba Switch solutions